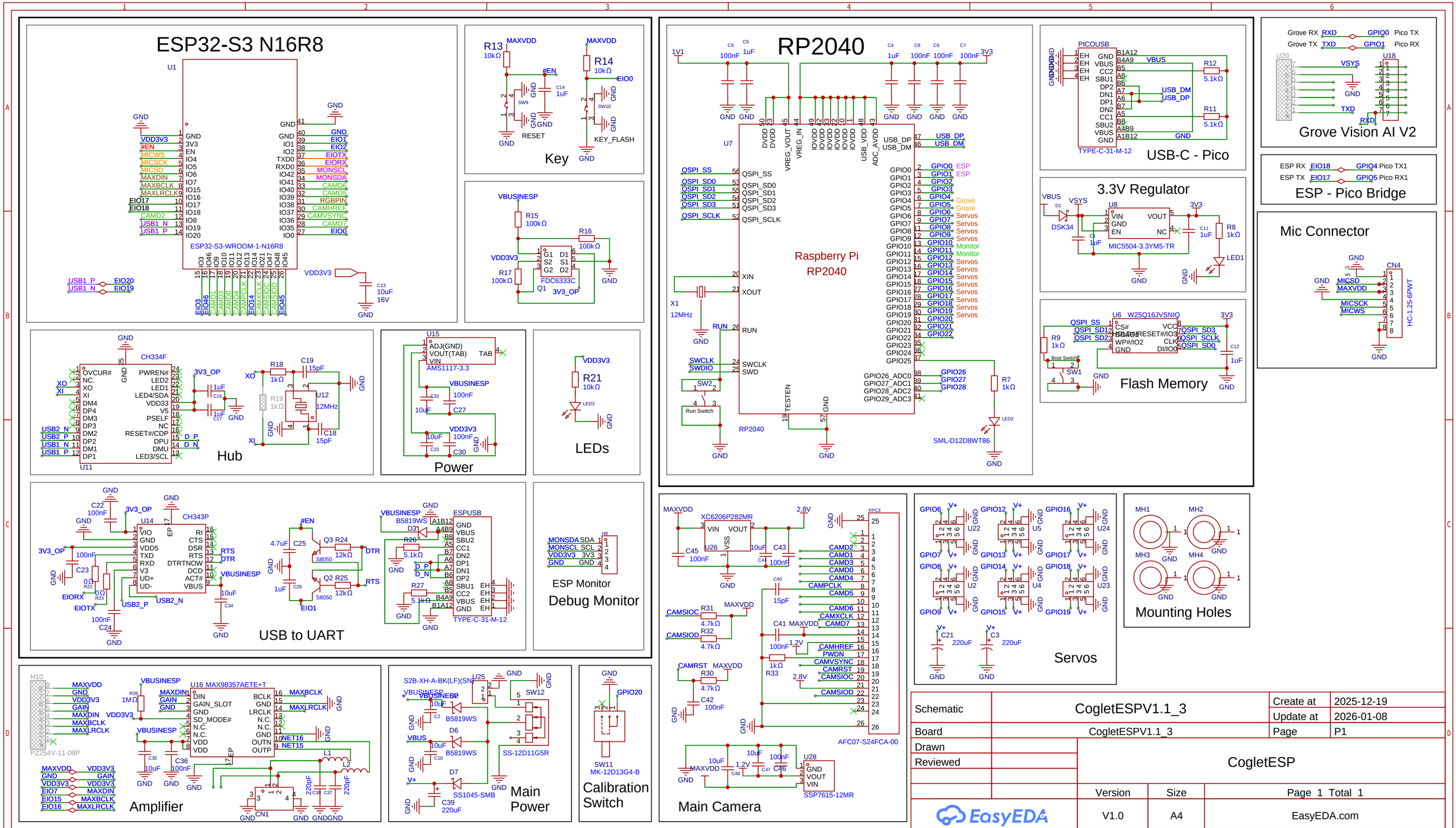

Schematic	CogletESPV1.1_3	Create at	2025-12-19
		Update at	2026-01-08
Board	CogletESPV1.1_3	Page	P1
Drawn	CogletESP		
Reviewed			
		Version	Size	Page 1 Total 1
EasyEDA		V1.0	A4	EasyEDA.com